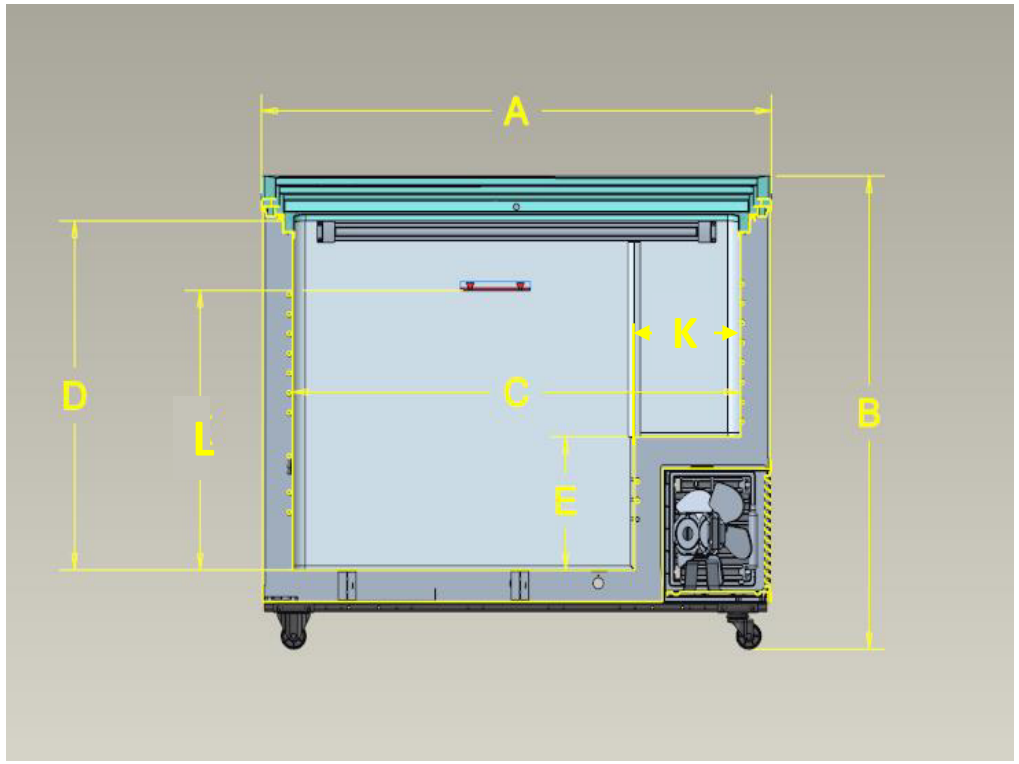

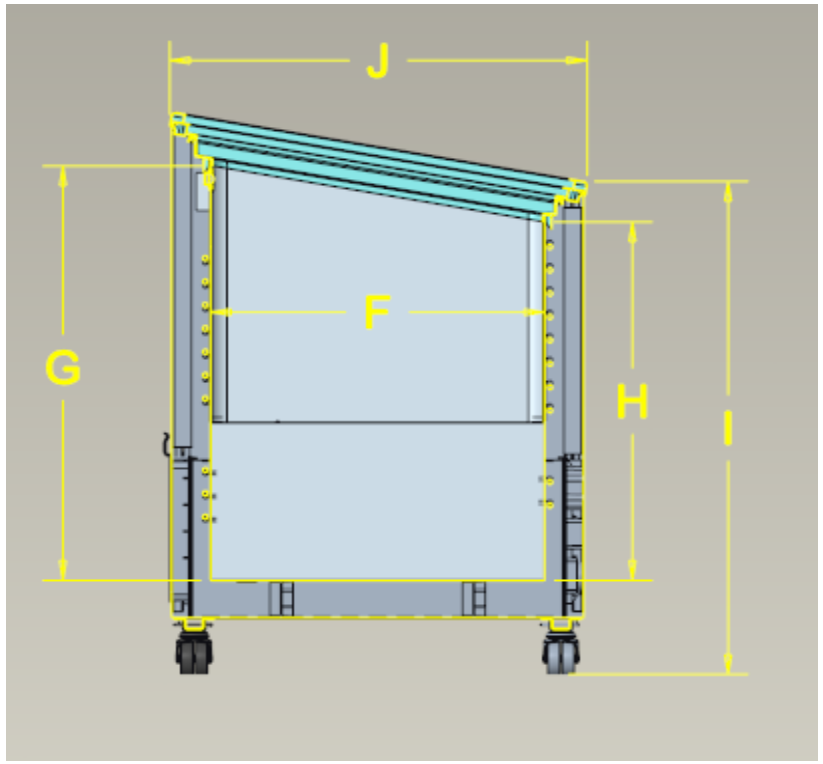

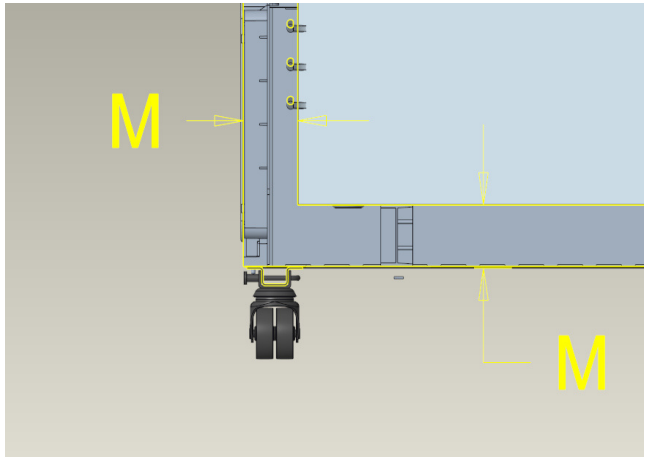

MODEL	A	B	C	D	E	F	G	H	I	J	K	L Loading Level	M Foam Thicness
922022	725		600										
		890		656	250	510	656	567	780	635	210	525	60
922043	1305		1180										