EXPLOSIONSZEICHNUNG

KBS Gastrotechnik GmbH – Schoßbergstraße 26 – 65201 Wiesbaden

www.kbs-gastrotechnik.de
Stand April 2025
*Für Druckfehler keine Haftung

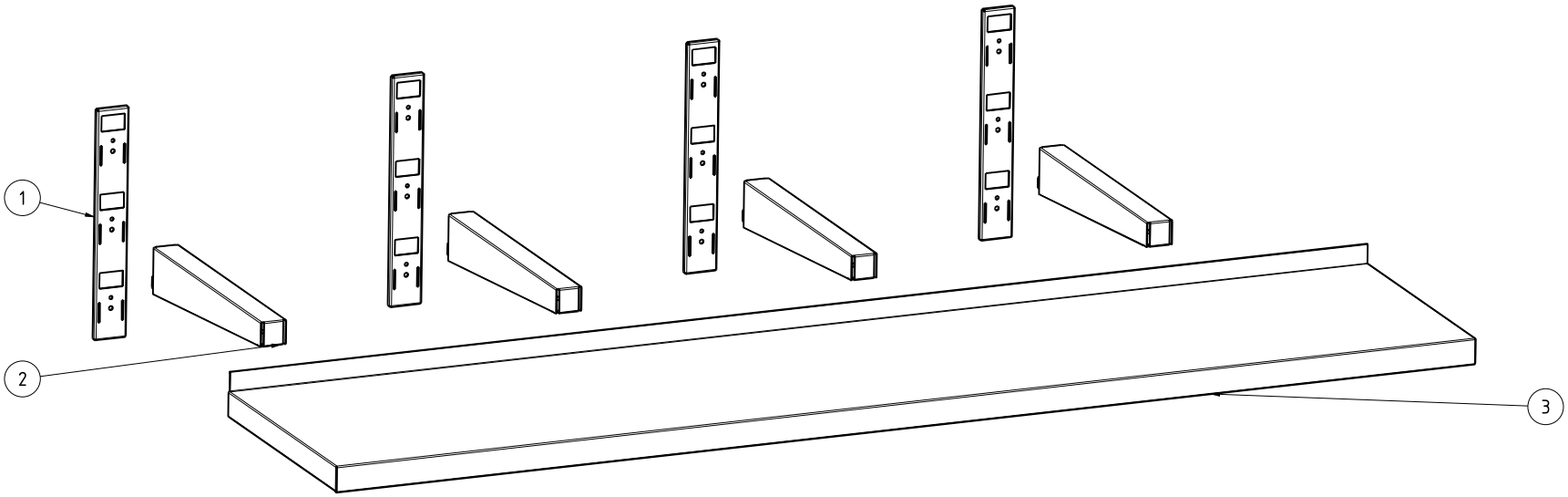

ITEM NO	PART NUMBER	QTY	DESCRIPTION	
4	P40_SINGOLA	4	P40 SINGOLA	
3	ME023	1	RIPIANO MENSOLA P40 L180	SHELF P40 L180
2	ME008	4	SUPPORTO PER MENSOLE P40 H40	SUPPORT FOR SHELVES P40 H40
1	ME001	4	SUPPORTO A PARETE PER MENSOLE H35	WALL BRACKET FOR SHELVES H35

DATA DATE	MODIF.N. MODIF.NO.	DESCRIZIONE MODIFICHE MODIFICATION DESCRIPTION	DISEGNATO DRAWN BY	APPROVATO APPROVED

MODELLO / MODEL: MENSOLA 180x40 / SHELF 180x40

DISEGNO N. / DRAWING NO.: DSM184

SCALA / SCALE: -

PARTICOLARE / DETAIL: SCHEDA TECNICA / DATA SHEET

DISEGNATO / DRAWN BY: M.PAPI

DATA / DATE:

MATERIALE / MATERIAL

SPESS. / THICK.

APPROVATO / APPROVED

SHEET 2 OF 2

FINITURA / FINISH

PEZZI N. / PIECES NO.

SOSTITUISCE IL DIS. N. / IT REPLACES DRAWING NO.

ULTIMA EMISS. / LAST EDITION

TRATTAMENTO / TREATMENT

COLORE / COLOUR

SOSTITUITO DAL DIS. N. / REPLACED BY DRAWING NO.

RISTOPRO
PROFESSIONAL CATERING EQUIPMENT

RISTOPRO SRL
FRAZ. BORGO TUFICO, 47 FABRIANO (AN)
ITALY +39.732.043494
WWW.RISTOPRO.COM

mm

FORM.A-2

ELABORATO CON SISTEMA CAD
DESIGNED BY CAD SYSTEM

QUOTA PRIMARIA
PRIMARY DIMENSION

XX

ANGOLI
Angles
±1°30'

QUOTE SENZA TOLLERANZA TOLLERANCE UNLESS OTHERWISE STATED

LUNGHI E DIAM. LENGHT AND DIAM.	0-5	5-10	10-18	18-30	30-50	50-80	80-120	120-180	180-250	250-315	315-400	400-500	>500
	±0.10	±0.15	±0.20	±0.25	±0.30	±0.35	±0.40	±0.45	±0.50	±0.55	±0.60	±0.65	±0.75