EXPLOSIONSZEICHNUNG

KBS Gastrotechnik GmbH – Schoßbergstraße 26 – 65201 Wiesbaden

www.kbs-gastrotechnik.de
Stand April 2025
*Für Druckfehler keine Haftung

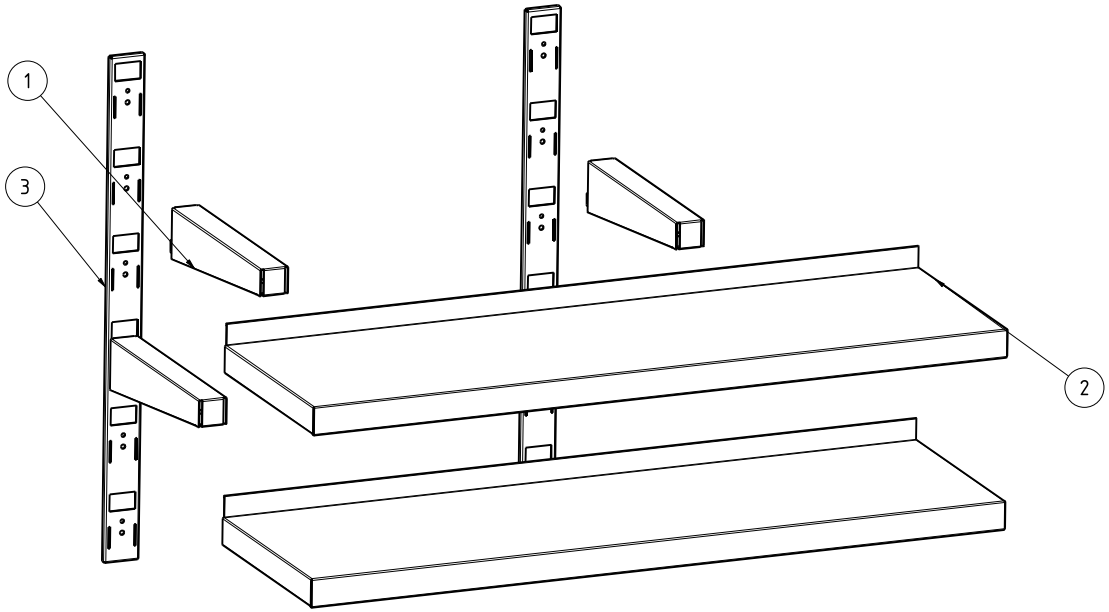

ITEM NO	PART NUMBER	QTY	DESCRIPTION	
3	ME236	2	SUPPORTO A PARETE PER MENSOLE H70	WALL BRACKET FOR SHELVES H70
2	ME010	2	RIPIANO MENSOLA P30 L100	SHELF P30 L100
1	ME007	4	SUPPORTO PER MENSOLE P30 H40	SUPPORT FOR SHELVES P30 H40

DATA DATE	MODIF.N. MODIF.NO.	DESCRIZIONE MODIFICHE MODIFICATION DESCRIPTION	DISEGNATO DRAWN BY	APPROVATO APPROVED

MODELLO MODEL	MENSOLA DOPPIA L120 P40 SHELF L120 P40	DISEGNO N. DRAWING NO. DSMD103	SCALA SCALE -
PARTICOLARE DETAIL	SCHEDA TECNICA DATA SHEET	DISEGNATO DRAWN BY M.PAPI	DATA DATE
MATERIALE MATERIAL	AISI 304 - AISI 430 / SPESS. THICK.	APPROVATO APPROVED	SHEET 2 OF 2
FINITURA FINISH	PEZZI N. PIECES NO.	SOSTITUISCE IL DIS. N. IT REPLACES DRAWING NO.	ULTIMA EMISS. LAST EDITION
TRATTAMENTO TREATMENT	COLORE COLOUR	SOSTITUITO DAL DIS. N. REPLACED BY DRAWING NO.	

RISTOPRO
PROFESSIONAL CATERING EQUIPMENT

RISTOPRO SRL
FRAZ. BORGO TUFICO, 47 FABRIANO (AN)
ITALY +39.732.043494
WWW.RISTOPRO.COM

mm

FORM.A-2

ELABORATO CON SISTEMA CAD
DESIGNED BY CAD SYSTEM

QUOTA PRIMARIA
XX PRIMARY DIMENSION

ANGOLI
Angles
±0°30'

QUOTE SENZA TOLLERANZA TOLLERANCE UNLESS OTHERWISE STATED

LUNGHI E DIAM. LENGHT AND DIAM.	0-5	5-10	10-18	18-30	30-50	50-80	80-120	120-180	180-250	250-315	315-400	400-500	>500
	±0.10	±0.15	±0.20	±0.25	±0.30	±0.35	±0.40	±0.45	±0.50	±0.55	±0.60	±0.65	±0.75