EXPLOSIONSZEICHNUNG

KBS Gastrotechnik GmbH – Schoßbergstraße 26 – 65201 Wiesbaden

www.kbs-gastrotechnik.de
Stand November 2022

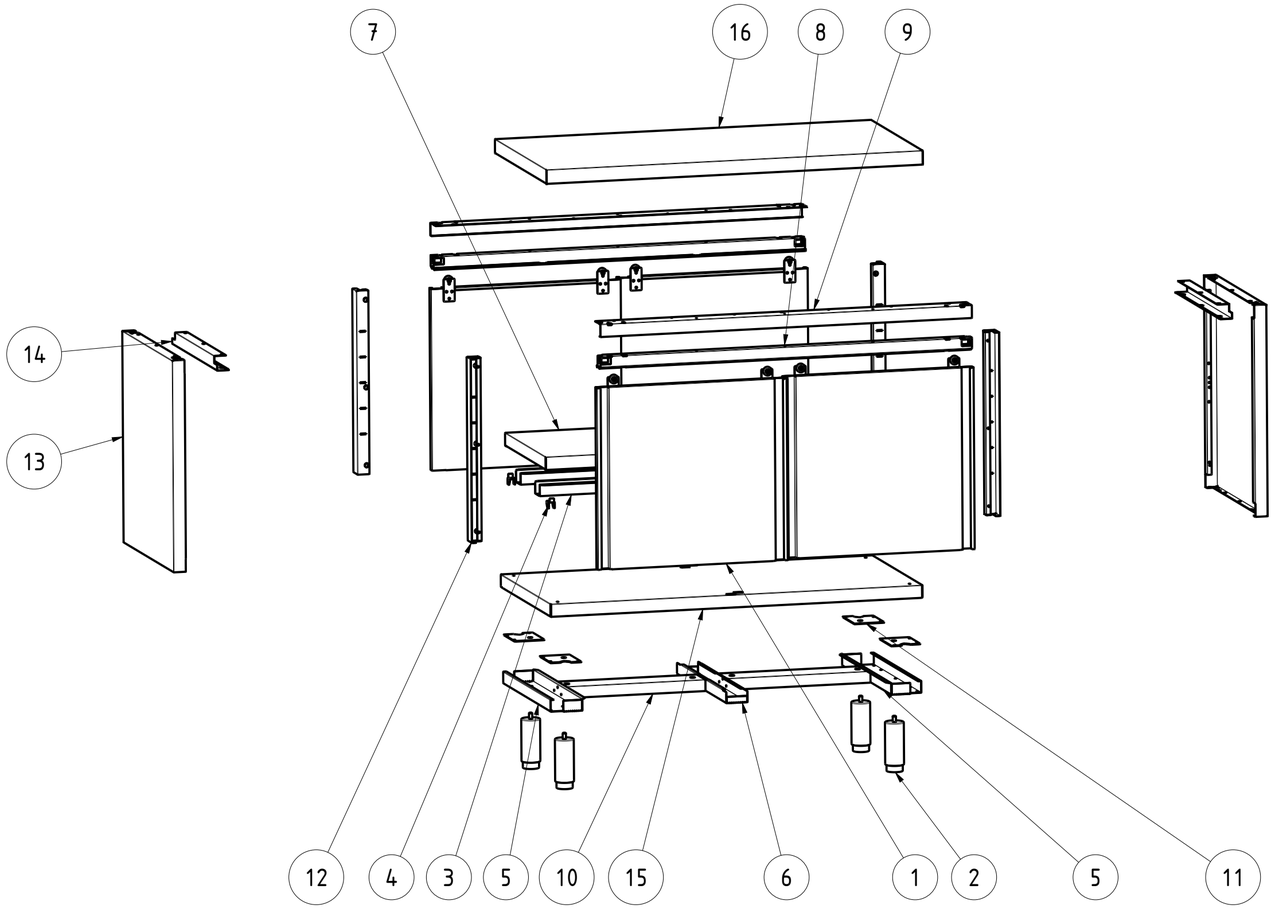

ITEM NO	PART NUMBER	QTY	DESCRIPTION	
16	NT3919Q	1	TOP Q 120x60	TOP Q 120x60
15	NT4402	1	PIANO BASE TAP 120x60	BASE SHELF TAP 120x60
14	NT4150	2	COLLEGAMENTO MONTANTI P60	UPRIGHT CONNECTION P60
13	NT4148	2	FIANCO DX/SX TAVOLO SU FIANCHI/PASSANTE P60	RIGHT SIDE / LEFT SIDE TABLE ON SIDES P60
12	NT4147	4	MONTANTE ASOLATO	HOLED UPRIGHT
11	NT4144	4	PIASTRA RIV PIEDINO PORTA BATTENTE	PLATE EXTERNAL LEG HINGED DOOR
10	NT4058	2	OMEGA LONGITUDINALE (DIV.2) L120	LONGITUDINAL OMEGA L120
9	NT3590	2	ANGOLARE SUPP. BINARIO L120	ANGULAR BINARY SUPPORT L120
8	NT3579	2	BINARIO TAVOLI ARMADIATI L120	BINARY L120
7	NT2860	1	PIANO INTERNO REGOLABILE TAP TF 120x60	INTERNAL ADJUSTABLE SHELF TAP 120x60
6	NT2353	1	OMEGA CENTR RIV. PIANO BASE P60	CENTRAL OMEGA BASE SHELF P60
5	NT2351	2	OMEGA LATERALE PIANO BASE P60	LATERAL OMEGA BASE SHELF P60
4	NT330	4	STAFFA SUPPORTO RIPIANO INTERNO	GANCRIP - INTERNAL SHELF SUPPORT BRACKET
3	NT184	2	OMEGA RINFORZO PIANO INTERNO L120	OMEGA SHELF RENIFORCEMENT L120
2	DSPIEDTA	4	PIEDINO PER TAVOLI ARMADIATI	FOOT FOR CABINET TABLES
1	APS_L120_H85	4	ASSIEME PORTE SCORREVOLI L120 H85	SLIDING DOORS ASSEMBLY L120 H85

DATA DATE	MODIF.N. MODIF.NO.	DESCRIZIONE MODIFICHE MODIFICATION DESCRIPTION	DISEGNATO DRAWN BY	APPROVATO APPROVED
-	-	-		

MODELLO MODEL	TAVOLO PASSANTE 120x60 OPEN TABLE SLIDING DOORS 120x60	DISEGNO N. DRAWING NO. DSTAP126	SCALA SCALE -
PARTICOLARE DETAIL	SCHEDA TECNICA DATA SHEET	DISEGNATO DRAWN BY M.PAPI	DATA DATE -
MATERIALE MATERIAL	SPESS. THICK.	APPROVATO APPROVED	SHEET 3 OF 4
FINITURA FINISH	PEZZI N. PIECES NO.	SOSTITUISCE IL DIS. N. IT REPLACES DRAWING NO.	ULTIMA EMISS. LAST EDITION
TRATTAMENTO TREATMENT	COLORE COLOUR	SOSTITUITO DAL DIS. N. REPLACED BY DRAWING NO.	

RISTOPRO
PROFESSIONAL CATERING EQUIPMENT

RISTOPRO SRL
FRAZ. BORGO TUFICO, 47 FABRIANO (AN)
ITALY +39.732.043494
WWW.RISTOPRO.COM

mm

FORM.A-2

ELABORATO CON SISTEMA CAD
DESIGNED BY CAD SYSTEM

XX QUOTA PRIMARIA
PRIMARY DIMENSION

ANGOLI Angles ±0°30'

QUOTE SENZA TOLLERANZA TOLLERANCE UNLESS OTHERWISE STATED

LUNGH. E DIAM. LENGHT AND DIAM.	0-5	5-10	10-18	18-30	30-50	50-80	80-120	120-180	180-250	250-315	315-400	400-500	>500
	±0.10	±0.15	±0.20	±0.25	±0.30	±0.35	±0.40	±0.45	±0.50	±0.55	±0.60	±0.65	±0.75