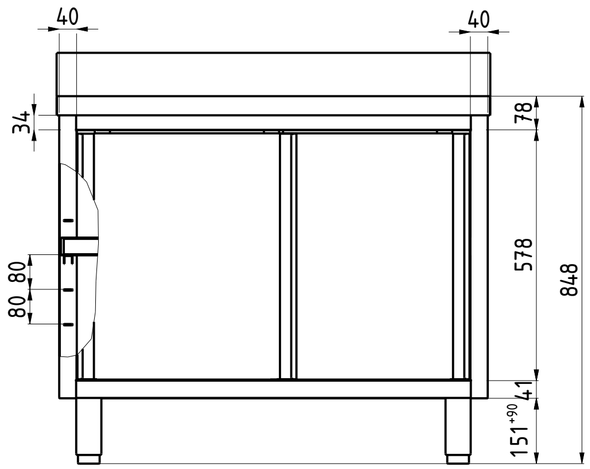

FRONT VIEW C-C 1:10

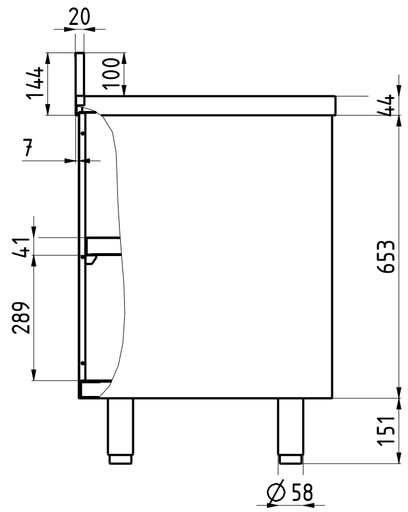

A-A

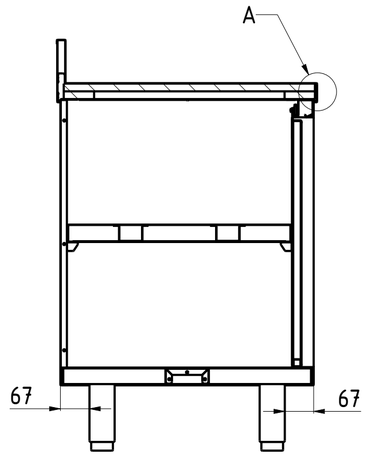

E-E

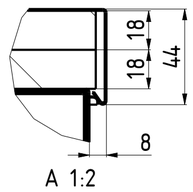

A 1:2

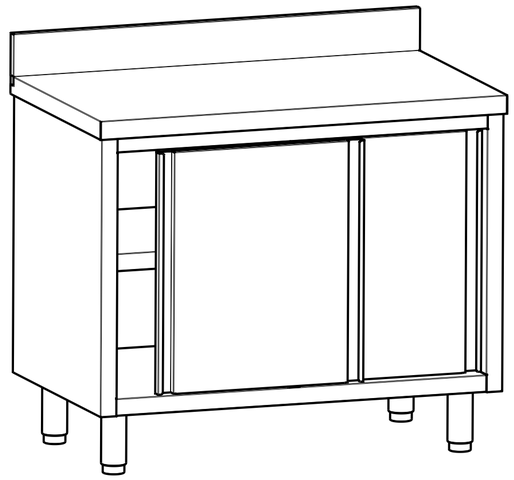

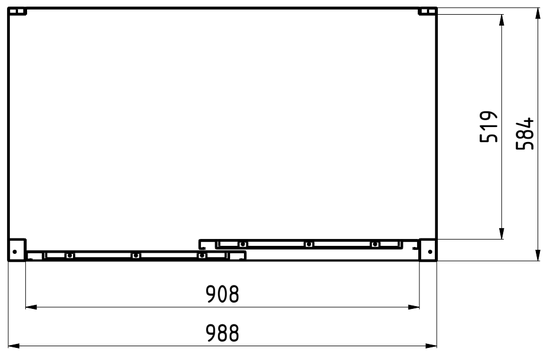

INTERNAL DIM
D-D

DATA DATE	MODIF.N. MODIF.NO.	DESCRIZIONE MODIFICHE MODIFICATION DESCRIPTION	DISEGNATO DRAWN BY	APPROVATO APPROVED

MODELLO MODEL	TAVOLO ARMADIATO 100x60 ALZ TABLE CABINET 100x60 UPSTAND	DISEGNO N. DRAWING NO. DSTA106A	SCALA SCALE -
PARTICOLARE DETAIL	SCHEDA TECNICA DATA SHEET	DISEGNATO DRAWN BY M.PAPI	DATA DATE -
MATERIALE MATERIAL	AISI 304 - AISI 430	SPESS. THICK. - / APPROVATO APPROVED	SHEET 2 OF 5
FINITURA FINISH		PEZZI N. PIECES NO. / SOSTITUISCE IL DIS. N. IT REPLACES DRAWING NO.	ULTIMA EMISS. LAST EDITION
TRATTAMENTO TREATMENT		COLORE COLOUR / SOSTITUITO DAL DIS. N. REPLACED BY DRAWING NO.	

RISTOPRO
PROFESSIONAL CATERING EQUIPMENT

RISTOPRO SRL
FRAZ. BORGO TUFICO, 47 FABRIANO (AN)
ITALY +39.732.043494
WWW.RISTOPRO.COM

mm

FORM.A-2

ELABORATO CON SISTEMA CAD
DESIGNED BY CAD SYSTEM

QUOTA PRIMARIA
PRIMARY DIMENSION
XX

ANGOLI
Angles
±0°30'

QUOTE SENZA TOLLERANZA, TOLLERANCE UNLESS OTHERWISE STATED

0-5	5-10	10-18	18-30	30-50	50-80	80-120	120-180	180-250	250-315	315-400	400-500	>500
±0.10	±0.15	±0.20	±0.25	±0.30	±0.35	±0.40	±0.45	±0.50	±0.55	±0.60	±0.65	±0.75

LUNGH. E DIAM.
LENGHT AND DIAM.