EXPLOSIONSZEICHNUNG

KBS Gastrotechnik GmbH – Schoßbergstraße 26 – 65201 Wiesbaden

www.kbs-gastrotechnik.de
Stand März 2022

KLARCO®
www.klarco.com

KLARCO s.r.l. a s.u.
Via Masieres 7 z.i.
I-33080 San Quirino PN - Italia
+39 0434 919422
Fax +39 0434 919494

ITEM NO.	SALES NO.	DESCRIPTION
1	P020	SPRAY VALVE "NEW "
2	P074	FLAT GASKET 1/2" Ø18,5x11 sp.2mm
3	P005	OVERHEAD SPRING "GREY
4	P163	100cm Ø17 F1/2"xF1/2" FLEXIBLE HOSE
5	P090	SPRING SUPPORT
6	P001	650mm G1/2" RISER W.O-Ring
7	P091	SPRAY VALVE HOOK (BLACK)
8	P092	Wall Bracket L.115mm (BLACK)
9	P388	O-RING 18x1,5 EPDM 70sh.
10	HK3/B	"3P" HANDLE W. BLUE CODED INDEX
11	P236	SPOUT SCREW (short)
12	VK13/B	COMPLETE HANDLE W.BLUE CODED INDEX + HEADWORK KIT
13	V040/D	1/2" CERAMIC HEADWORK (RH)
14	H021	DIVERTER KNOB
15	P592	SWIVEL SLEEVE
16	P613	#2 OR+#1 SWIVEL SLEEVE KIT FOR FAUCET/OUTLET
17	P072	O-Ring 119 (Ø 15,08 x 2,62mm) EPDM 70
18	P014	STREAM REGULATOR OUTLET (Ø25 SPOUT)
19	C014	SWING NOZZLE Ø25x250 h.150
20	HK3/R	"3P" HANDLE W. RED CODED INDEX
21	VK13/R	COMPLETE HANDLE W.RED CODED INDEX + HEADWORK KIT
22	V010	HIGH FLOW G3/4" COMPRESSION HEADWORK

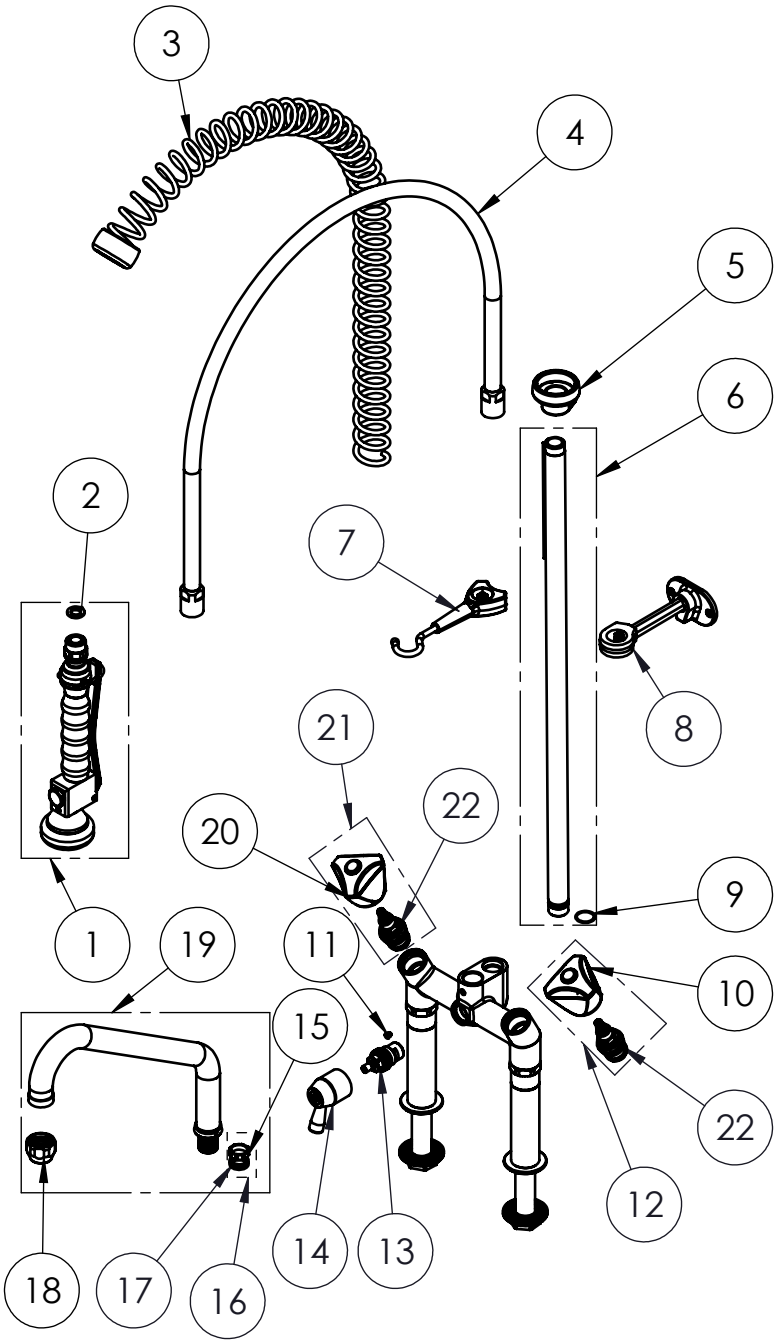

TITLE / DESCRIZIONE	DRN / DIS	CHD / VER	APPR
Elevated double-hole (155mm center distance) slanted, mixing temperature, deck mount Pre-Rinse Unit with 120mm risers, 250mm swivel nozzle (Ø 25mm), switch for spray valve/ nozzle. 80mm-long mounting shanks, G1/2" male inlets with check valves, G3/4" high flow compression headworks, riser tube – stainless steel, brass, chrome plated. 16L/min KLARCO "NEW" spray valve.	SCALE / SCALA 1:8	DATE / DATA 28/02/2020	SHEET / PAG 2 of 2
This drawing contains proprietary information which is the property of KLARCO S.R.L. without whose written permission it may not be copied, shown or handed to a third party or otherwise used — Questo disegno contiene informazioni di proprietà di KLARCO S.R.L. e senza la sua autorizzazione scritta non può essere copiato, mostrato o ceduto a terzi o in qualsiasi altro modo usato	NUMBER / CODICE DIS.	MODEL / PRODOTTO 2S.3050.14.K13P020	A4V

S:\Tech\DISEGNI\2S\2S.30\2S.3050.14.K13P020