SCHNITTZEICHNUNG

KBS Gastrotechnik GmbH – Schoßbergstraße 26 – 65201 Wiesbaden

www.kbs-gastrotechnik.de
Stand März 2022

KLARCO®
www.klarco.com

KLARCO s.r.l. a s.u.
Via Masieres 7 z.i.
I-33080 San Quirino PN - Italia
+39 0434 919422
Fax +39 0434 919494

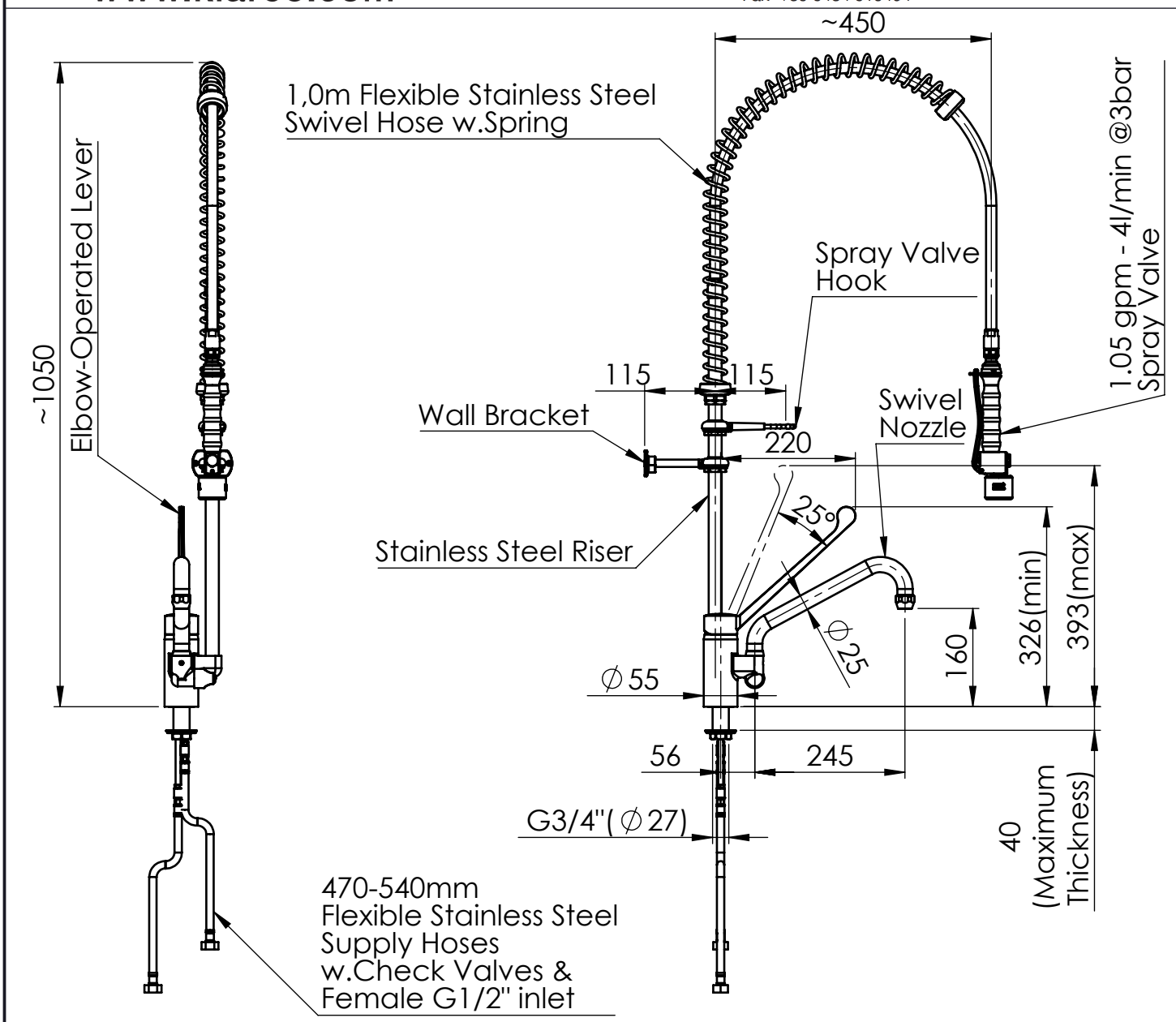

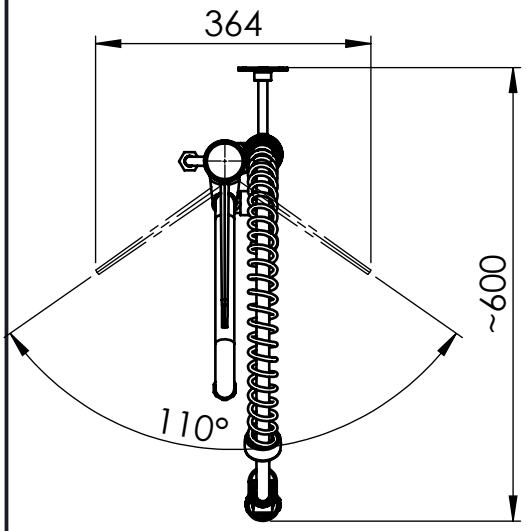

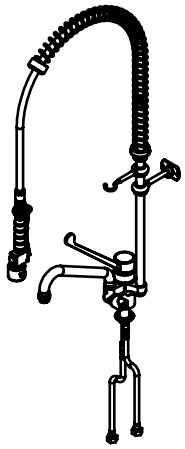

Rough-In Requirement:
29mm Mounting Hole

TITLE / DESCRIZIONE	DRN / DIS	CHD / VER	APPR
Single hole, mixing temperature, deck mount Pre-Rinse Unit with 245mm long Sanitary Lever and 245mm swivel nozzle (Ø 25mm), switch for spray valve/ nozzle. 50mm-long mounting shank, G1/2" female inlets with check valves, high flow ceramic cartridge, riser tube - stainless steel, brass, chrome plated, Sanitary Lever – fiber glass reinforced Polyamide. 4L/min KLARCO Low-Flow spray valve	SCALE / SCALA 1:10	DATE / DATA 28/02/2020	SHEET / PAG 1 of 2
This drawing contains proprietary information which is the property of KLARCO S.R.L. without whose written permission it may not be copied, shown or handed to a third party or otherwise used / Questo disegno contiene informazioni di proprietà di KLARCO S.R.L. e senza la sua autorizzazione scritta non può essere copiato, mostrato o ceduto a terzi o in qualsiasi altro modo usato	NUMBER / CODICE DIS.	MODEL / PRODOTTO 2E.2912.4L.72C82	A4V