# EXPLOSIONSZEICHNUNG

KBS Gastrotechnik GmbH – Schoßbergstraße 26 – 65201 Wiesbaden

www.kbs-gastrotechnik.de
Stand Oktober 2024
*Für Druckfehler keine Haftung

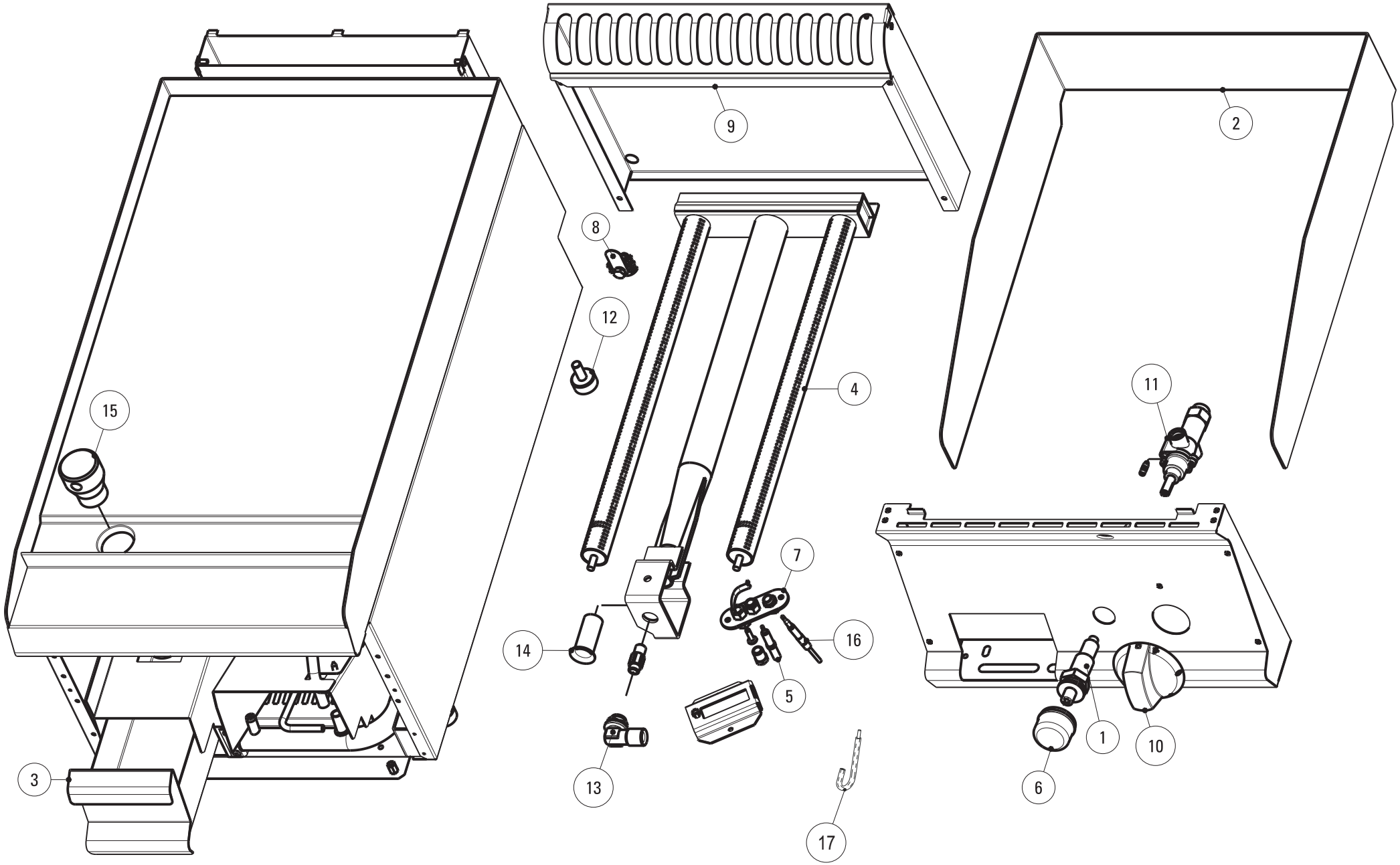


| DATA STAMPA / STAMP DATE | CODICE / CODE | FOGLIO / SHEET | MODELLI / MODELS |
|---|---|---|---|
| 06.12.12 | 5415.197.01 | 1/1 | FTL_G7 / FTR_G7 |

TECNOINOX

## Ersatzteilliste

*613088 AUFTISCH-GAS-GRILLPLATTE 1/3 GERILLT*

| Empfohlen | | Pos. | Code | Beschreibung |
|---|---|---|---|---|
| | | | RC01170000 | BOCCOLA REGOLAZIONE ARIA D18-16 |
| * | | 01 | RC00128000 | PIEZOZUNDER |
| | | 02 | RC02023000 | ALZATINA AMOVIBILE FRYTOP |
| | | 03 | RC01481000 | CASSETTO RACCOGLI OLIO |
| | | 04 | RC01164000 | BRENNER |
| * | | 05 | RC01168000 | ZUNDKERZE |
| * | | 06 | RC01685000 | CAPPUCCIO IN GOMMA PER PIEZO |
| | | 07 | RC01169000 | GRUPPO PILOTA |
| | | 08 | RC00304000 | MORSETTO EQUIPOTENZIALE COMPLETO |
| | | 09 | RC02056000 | CAMINO FRYTOP |
| | | 11 | RC05001400 | GASHAHN |
| | | 12 | RC00311000 | FUB |
| | | 13 | RC01165000 | DÜSENTRAEGER |
| | | 14 | RC01170000 | BOCCOLA REGOLAZIONE ARIA D18-16 |
| | | 15 | RC00573000 | OL ABLAUFSTOPFEN ZU KOCHPLATTE |
| * | | 16 | RC00118000 | THERMOELEMENT |
| * | | 17 | RC00123000 | ZUENDKABEL |
| | | 10a | RC01887000 | MANOPOLA GAS NERA |

**Tecnoinox Srl Socio Unico**
Via Torricelli, 1 | 33080 Porcia (PN) ITALIA
T +39 0434 920110 | F +39 0434 920422
tecnoinox@tecnoinox.it
**www.tecnoinox.it**

Partita IVA e codice ISO / VAT code: IT 01039240930
C.F. e Reg.imp. di PN num. / Fiscal n°reg. of comp: 01039240930
Mecc. PN 003422 - R.E.A PN 40050
RAEE: IT 08020000000607
Capitale sociale i.v. / Paid up share capital: € 51.480,00

Member of CISQ Federation
RINA
CERTIFIED MANAGEMENT SYSTEM
ISO 9001 - ISO 14001
ISO 45001